JACOBI AND WATSON IDENTITIES
COMBINATORIALLY REVISITED

Dominique Foata and Guo-Niu Han

Abstract. This paper takes up again the study of the Jacobi and Watson identities that have been derived combinatorially in several manners in the classical literature.

1. Introduction

In the classical literature the Jacobi triple product appears in one of the following two forms

$$\prod_{n=1}^{\infty}(1-x^{-1}q^{n-1})(1-xq^n)=\prod_{i=1}^{\infty}\frac{1}{(1-q^i)}\sum_{k=-\infty}^{+\infty}(-1)^k\,x^k\,q^{k(k+1)/2}, \tag{1.1}$$

$$\prod_{n=1}^{\infty}(1-x^{-1}\,q^{2n-1})(1-x\,q^{2n-1})=\prod_{i=1}^{\infty}\frac{1}{(1-q^{2i})}\sum_{k=-\infty}^{+\infty}(-1)^k\,x^kq^{k^2}, \tag{1.2}$$

while the Watson quintuple product reads

$$\begin{aligned}\prod_{n=1}^{\infty}&(1-x^{-1}q^{n-1})(1-xq^n)(1-x^{-2}\,q^{2n-1})(1-x^2\,q^{2n-1})\\ &=\prod_{i=1}^{\infty}\frac{1}{(1-q^i)}\sum_{k=-\infty}^{+\infty}q^{(3k^2+k)/2}(x^{3k}-x^{-3k-1}).\end{aligned} \tag{1.3}$$

The letters x and q may be regarded as complex variables with $|q|<1$ and $x\neq 0$ or as simple indeterminates. In the latter case consider the ring $\Omega[x,x^{-1}]$ of the polynomials in the variables x and x^{-1} such that $xx^{-1}=1$ with coefficients in a ring Ω. Then the identities hold in the algebra of formal power series in the variable q with coefficients in $\Omega[x,x^{-1}]$.

As usual, let $(a;q)_n$ denote the q-ascending factorial

$$(a;q)_n=\begin{cases}1, & \text{if } n=0;\\ (1-a)(1-aq)\dots(1-aq^{n-1}), & \text{if } n\geq 1;\end{cases}$$

$$(a;q)_\infty=\prod_{n\geq 0}(1-aq^n);$$

and adopt the following classical notation for the q-binomial coefficient:

$$\begin{bmatrix} n \\ k \end{bmatrix}_q = \frac{(q;q)_n}{(q;q)_{n-k}(q;q)_k} \quad (0 \le k \le n).$$

Then identities (1.1) and (1.2) have two finite versions given by

$$(x^{-1};q)_n\,(xq;q)_m = \sum_{j=-n}^{m} \begin{bmatrix} n+m \\ j+n \end{bmatrix}_q (-x)^j\, q^{j(j+1)/2}; \tag{1.4}$$

$$(x^{-2};q^2)_n\,(x^2q;q^2)_m = \sum_{j=-n}^{m} \begin{bmatrix} n+m \\ j+n \end{bmatrix}_{q^2} (-x^2)^j\, q^{j^2}. \tag{1.5}$$

Those two versions with n and m not necessarily equal are apparently due to MacMahon ([Ma15], vol. 2, § 323). He proved (1.5) by using Sylvester's [Sy82] "quasi-geometrical method of demonstration" and notes that to obtain (1.4) the variable x is to be replaced by xq and then q^2 by q. With similar substitutions (1.5) can be derived from (1.4). As those substitutions are made within finite expressions the derivations are straightforward.

On the other hand, as shown to us by Andrews [An98], and as it is well-known in the case $m = n$, identity (1.4) can be proved by means of the q-binomial identity in its finite form. Proceed as follows:

$$\begin{aligned}
(x^{-1};q)_n\,(xq;q)_m &= (-1)^n x^{-n} q^{n(n-1)/2} (xq^{1-n};q)_n\,(xq;q)_m \\
&= (-1)^n x^{-n} q^{n(n-1)/2} (xq^{1-n};q)_{n+m} \\
&= (-1)^n x^{-n} q^{n(n-1)/2} \sum_{j=0}^{n+m} \begin{bmatrix} n+m \\ j \end{bmatrix}_q (-xq^{1-n})^j q^{j(j-1)/2} \\
&= \sum_{j=0}^{n+m} \begin{bmatrix} n+m \\ j \end{bmatrix}_q (-x)^{j-n} q^{(j-n)(j-n+1)/2} \\
&= \sum_{j=-n}^{m} \begin{bmatrix} n+m \\ j+n \end{bmatrix}_q (-x)^j q^{j(j+1)/2}.
\end{aligned}$$

Now to deduce the "infinite" versions (1.1), (1.2) from the finite ones we only have to let n and m tend to infinity. Using (1.4) for $n = m$ the product $(x^{-1};q)_m\,(xq;q)_m\,(q;q)_\infty$ can be expressed as

$$\sum_{j=-m}^{m} (q^{m-j+1};q)_{m+j}\,(q^{m+j+1};q)_\infty\,(-x)^j\, q^{j(j+1)/2}.$$

In that sum the running term is equal to $(-x)^j\, q^{j(j+1)/2}(1 - q^{m-|j|+1}a_j)$, with a_j a series in q, so that $(x^{-1};q)_m\,(xq;q)_m\,(q;q)_\infty = b_m + q^m c$, where b_m is the series $b_m = \sum_{j=-m}^{m} (-x)^j\, q^{j(j+1)/2}$ and c is a non-null series. Hence $(x^{-1};q)_\infty\,(xq;q)_\infty\,(q;q)_\infty = \lim_m b_m = \sum_{j=-\infty}^{\infty} (-x)^j\, q^{j(j+1)/2}$, which is simply (1.1).

The MacMahon finite versions (1.4) and (1.5) could be regarded as the "fundamental" triple product identities and still, they are derived by means of the q-binomial identity in its finite form. Here we face one of the mysteries of mathematical tradition: explain why so many proofs of those identities can be found in the literature, as will be recalled below.

On the other hand, a glance at the left-hand sides of identities (1.1), (1.2), (1.3) shows that (1.3) must be a consequence of (1.1) and (1.2) once we know how to handle the product of the right-hand sides of the first two identities, when x is replaced by x^2 in (1.2). It is true, as was first derived by Carlitz and Subbarao [Ca72]. In section 5 we shall reprove (1.3) using an argument very close to theirs.

In fact, our first aim was to give a *combinatorial proof* of (1.3), that could be deduced from the combinatorial study of (1.1) and (1.2). This program was only partially fulfilled, because (1.3) is an easy consequence of both triple product identities and changing the "manipulatorics" needed into some combinatorial construction would have been a useless task. As will be seen in section 5, besides the two triple product identities, we only need the Euler pentagonal number formula, another special case of those two identities, and a simple summation manipulation.

Before imagining our own combinatorial proofs of (1.1) and (1.2) we tried to go through the classical literature. The first combinatorial proofs go back to Sylvester [Sy82] and have been the sources of inspiration of several subsequent ones, by Wright [Wr65], Sudler [Su66], Ewell [Ew81], Lewis [Le84]. Joichi and Stanton [Jo89] discuss the various merits of those proofs. They are mostly interested in building natural involutions for proving partition identities; they also compare the approaches due to Zolnowsky [79] and Cheema [Ch64].

The other proofs are of formal nature, as in MacMahon ([Ma15], vol. 2, § 327, see our discussion of that proof in section 2), Bressoud [Br97] or of analytical nature, as in Andrews [An65], [An74], [An84], or in the classical treatises by Hardy and Wright [Ha38], Andrews [An76], Gupta [Gu87]. A fairly complete bibliography can be found in Gasper and Rahman [Ga90].

The quintuple product identity is originally due to Watson [Wa29]. Other proofs were given by Gordon [Go61], Carlitz and Subbarao [Ca72], Subbarao and Vidyasagar [Su70]. Hirschhorn [Hi88] proposes a generalisation of that identity and claims that there are "no fewer than twelve proofs of the quintuple product identity," in particular by Bailey [Ba51], Sears [Se52], Atkin and Swinnerton-Dyer [At54], Andrews [An74].

Finally, those identities are found in classical topics in Number Theory or Lie Algebra, as in Adiga, Berndt, Bhargava and Watson [Ad85], Gustafson [Gu87], Kac [Ka78], [Ka85], Lepowsky and Milne [Le78], Macdonald [Ma82], Menon [Me65], Milne [Mi85].

The combinatorial construction we are using can be seen on Fig. 2. Let us call it the *moving rectangle construction*: rectangle B after being transposed is placed under rectangle A, while the staircase E is deleted. This combinatorial pattern is used to prove *both* identities (1.1) and (1.2) (see Propositions 1 and 2 below). The only difference between the proofs of the two propositions is the fillings of the diagrammes with pluses and crosses in the first case (see Fig. 1) and crosses and bullets in the second case (see Fig. 3).

As pointed out by an anonymous referee, a similar construction had already been made, though only for proving (1.1), by Garvan [Ga86] in his unpublished Ph.D. thesis. We then called our construction the "modified Garvan method." Finally, our friends Zeng [Ze98] and Krattenthaler [Kr99] mentioned to us that our diagramme-filling method could also be used in the very first model imagined by Sylvester himself.

The organization of the paper is the following. In the next section we go back to the classical proof of (1.1) originated by MacMahon and show how it can be derived using only the topology of formal power series. Then in sections 3 and 4 we describe our rectangle moving method. We also show that the finite version identities (1.4) and (1.5) can also be proved by means of those combinatorial methods. We end the paper with the derivation of the quintuple product identity. In the sequel the set of all partitions of the nonnegative integer n will be denoted by $\mathcal{P}(n)$ and $p(n)$ will denote the number of partitions in $\mathcal{P}(n)$.

2. The classical proof

Let S be the set of all the pairs (i,j) with $i \in \{-1,+1\}$, $j \in \mathbb{N}$ and $(i,j) \neq (1,0)$. Associate with each $(i,j) \in S$ the polynomial $1-x^iq^j$ in the variable q with coefficients in $\Omega[x,x^{-1}]$. The family $(1-x^iq^j)$ $((i,j) \in S)$ is multipliable. Denote by a the product of this family:

$$a = \prod_{(i,j)\in S} (1-x^iq^j) = (1-x^{-1})(1-x^{-1}q)\dots(1-x^{-1}q^n)\dots \\ \times (1-xq)(1-xq^2)\dots(1-xq^n)\dots$$

We can always write the series a as the sum of the summable family

$$a = \sum_{i\in\mathbb{Z}} x^i\, c(i,\star),$$

where

$$c(i,\star) := \begin{cases} \displaystyle\sum_{j\geq i} q^j\, c(i,j), & \text{if } i \geq 0; \\ \displaystyle\sum_{j\geq |i|-1} q^j\, c(i,j), & \text{if } i \leq -1. \end{cases}$$

As derived by MacMahon ([Ma15], vol. 2, § 327) the (classical) proof of (1.1) consists of proving first the identity

$$a = c(0,\star) \sum_{i\in\mathbb{Z}} x^i\, q^{i(i+1)/2} \tag{2.1}$$

and then

$$c(0,\star) = 1/(q;q)_\infty. \tag{2.2}$$

For proving (2.1) MacMahon (*op. cit.*) did not bother using any kind of analytical argument, but still got the formula. His purpose was "to give some of the methods and processes of Gauss in the study of partition series." He believed that "they are highly ingenious and no student would find his equipment complete without them." As for (2.2) instead of using what we now call the Frobenius notation for partitions, he invented a clever but lengthy formal argument.

In modern times, see for instance [An65], [An74], [An84], the missing argument in the proof of (2.1) is easily provided and of course the Frobenius notation is a classic.

The purpose of this section is to derive (2.1) using only the topology of formal power series, although our Krattenthaler [Kr99] finds the present derivation somehow pedantic! We proceed as follows. First, $1-x^{-1}$ is the constant coefficient of a and for $n \geq 1$ its coefficient of q^n is equal to the coefficient of q^n in the *finite* product b_n defined by

$$\begin{aligned} b_n := \prod_{(i,j)\in S,\, j\leq n} a_{i,j} &= (1-x^{-1})(1-x^{-1}q)\dots(1-x^{-1}q^n) \\ &\quad \times (1-xq)(1-xq^2)\dots(1-xq^n). \end{aligned}$$

Rewrite b_n in the form

$$b_n = \sum_{-(n+1)\leq i\leq n} x^i\, b_n(i,\star),$$

where

$$b_n(i,\star) := \begin{cases} \displaystyle\sum_{i\leq j\leq 2n-i} q^j\, b_n(i,j), & \text{if } i \geq 0\ ; \\ \displaystyle\sum_{|i|-1\leq j\leq 2n+1-|i|} q^j\, b_n(i,j), & \text{if } i \leq -1. \end{cases}$$

The coefficients $b_n(i,j)$ are zero outside the hexagon H_n based on the vertices $(0,0)$, (n,n), $(0,2n)$, $(-1,2n)$, $(-n-1,n)$, $(-1,0)$, while the coefficients $c(i,j)$ are zero for all points (i,j) $(j \geq 0)$ not contained in the angle A delimited by the lines $i+j=-1$, $i=j$. In particular, for all $n \geq 0$

$$\sum_{-(n+1)\leq i\leq n} x^i c(i,n) = \sum_{-(n+1)\leq i\leq n} x^i\, b_n(i,n). \tag{2.3}$$

On the other hand, $b_{n+1} = b_n \times (1+x^{-1}q^{n+1})(1+xq^{n+1})$ implies that for $0 \le j \le n$ and all $i \in \mathbb{Z}$ we have

$$b_{n+1}(i,j) = b_n(i,j). \tag{2.4}$$

From (2.3) et (2.4) it follows that for $-(n+1) \le i \le n$ we have $b_n(i,n) = c(i,n)$; therefore, for $-n \le i \le (n-1)$ we have $b_n(i,n-1) = b_{n-1}(i,n-1) = c(i,n-1)$, so that for $0 \le j \le n$ and $-(j+1) \le i \le j$, that is, for $0 \le j \le n$ and $(i,j) \in A \cap H_n$ the following identity holds:

$$b_n(i,j) = c(i,j). \tag{2.5}$$

Relation (2.5) implies that for $n \ge i \ge 0$ and $i \le -1$, $n \ge |i|-1$ the series $c(i,\star) - b_n(i,\star)$ has an order in q at least equal to $(n+1)$, a result that we express as

$$b_n(i,\star) \equiv c(i,\star) \pmod{q^{n+1}}. \tag{2.6}$$

In $b_n = b_n(x^{-1},x;q) = (1+x^{-1})\cdots(1+x^{-1}q^n)(1+xq)\cdots(1+xq^n)$, make the substitution $x \leftarrow xq^{-1}$, $x^{-1} \leftarrow x^{-1}q$, so that $b_n(x^{-1}q, x\,q^{-1};q) = (1+x^{-1}q)\cdots(1+x^{-1}q^{n+1})(1+x)\cdots(1+xq^{n-1})$. Then

$$(1+xq^n)\, b_n(x^{-1}q, x\,q^{-1};q) = x\, b_n(x^{-1},x;q),$$

since $x(1+x^{-1}) = (1+x)$. We then get

$$(1+xq^n) \sum_{-(n+1)\le i\le n} x^i\, q^{-i}\, b_n(i,\star) = \sum_{-(n+1)\le i\le n} x^{i+1} b_n(i,\star).$$

Comparing the coefficients of x^i yields the formula

$$q^{-i}\, b_n(i,\star) + q^{n-i+1} b_n(i-1,\star) = b_n(i-1,\star),$$

for $1 \le i \le n$, i.e.,

$$b_n(i,\star) - q^i\, b_n(i-1,\star) \equiv 0 \pmod{q^{n+1}}.$$

By induction on i we get

$$b_n(i,\star) \equiv q^{i(i+1)/2}\, b_n(0,\star) \pmod{q^{n+1}}. \tag{2.7}$$

for $1 \le i \le n$. In the same manner, from $b_n(0,\star) + q^{n+1} b_n(-1,\star) = b_n(-1,\star)$ we deduce that for all $i \le -1$, $n \ge |i|-1$ the relation

$$b(-i,\star) \equiv q^{-i(-i+1)/2}\, b(0,\star) \pmod{q^{n+1}}. \tag{2.8}$$

It follows from (2.6), (2.7), (2.8) that for $0 \le i \le n$ and $i \le -1$, $|i| \le n+1$ we have $c(i,\star) \equiv q^{i(i+1)/2} c(0,\star) \pmod{q^{n+1}}$ and then for all $i \in \mathbb{Z}$ the relation $c(i,\star) = q^{i(i+1)/2} c(0,\star)$ and therefore identity (2.1).

Now evaluating $c(0,\star) = \sum_{n\ge 0} q^n\, c(0,n)$ is a classic argument. We reproduce it for the sake of completeness. The coefficient $c(0,n)$ is the coefficient of $x^0\, q^n$ in the finite product

$$(1+x^{-1})(1+x^{-1}q)\dots(1+x^{-1}q^n) \times (1+xq)(1+xq^2)\dots(1+xq^n).$$

Consequently, for $n \ge 1$ the coefficient $c(0,n)$ is equal to the number of sequences $(i_1, i_2, \dots, i_k, j_1, j_2, \dots, j_k)$ such that

(i) $1 \le k \le n$;

(ii) $0 \le i_1 < i_2 < \dots < i_k \le n$, $1 \le j_1 < j_2 < \dots < j_k \le n$;

(iii) $i_1 + i_2 + \dots + i_k + j_1 + j_2 + \dots + j_k = n$.

In such a sequence we can never have $i_k = n$, for condition (iii) would be violated. We can then replace conditions (ii) and (iii) by

(ii)$'$ $0 \le i_1 < i_2 < \dots < i_k \le n-1$, $0 \le j_1 < j_2 < \dots < j_k \le n-1$;

(iii)$'$ $i_1 + i_2 + \dots + i_k + j_1 + j_2 + \dots + j_k = n-k$.

But a two-row matrix $\begin{pmatrix} i_k & \dots & i_2 & i_1 \\ j_k & \dots & j_2 & j_1 \end{pmatrix}$ satisfying conditions (i), (ii)$'$, (iii)$'$ is nothing but the Frobenius notation for a partition of n, of rank k. Therefore, $c(0,n) = p(n)$, the number of partitions of n and $c(0,\star) = 1/(q;q)_\infty$.

3. The rectangle moving method

Consider the infinite series

$$a = \prod_{(i,j)\in S} (1 - x^i q^j) = \sum_{n\ge 0} a(n) q^n$$

and for each $k \in \mathbb{Z}$ and $n \in \mathbb{N}$ let $\mathcal{B}(k,n)$ be the set of ordered pairs of sequences of integers $(i_1, \dots, i_l)$, $(j_1, \dots, j_m)$ such that

(i) $0 \le i_1 < \dots < i_l$; $\quad 1 \le j_1 < \dots < j_m$;

(ii) $i_1 + \dots + i_l + j_1 + \dots + j_m = n$;

(iii) $m - l = k$.

Let $b(k,n)$ be the cardinality of $\mathcal{B}(k,n)$. Clearly, for $\mathcal{B}(n,k)$ to be non-empty, the inequality $n \ge k(k+1)/2$ must hold. Therefore, for each $k \in \mathbb{Z}$

$$a(n) = \sum_{\substack{n \ge k(k+1)/2 \\ k\in\mathbb{Z}}} (-1)^k\, x^k\, b(k,n).$$

Proposition 1. *For each pair $(k,n) \in \mathbb{Z} \times \mathbb{N}$ there is a bijection $\phi : \mathcal{B}(k,n) \to \mathcal{P}(n - k(k+1)/2)$. In particular, $b(k,n) = p(n - k(k+1)/2)$.*

The construction of such a bijection ϕ is made as follows. First let $k \le -1$ and consider the pair $\pi = (i_1, \dots, i_l), (j_1, \dots, j_m)$ belonging to

$\mathcal{B}(k,n)$, so that $l = m-k \geq 1$ and $i_1 + \cdots + i_{m-k} + j_1 + \cdots + j_m = n$. Define $\pi' = (j_1 - 1, \ldots, j_m - 1), (i_1 + 1, \ldots, i_{m-k} + 1)$. The sequence π' has the following properties:

$$\begin{gathered} 0 \leq (j_1 - 1) < \cdots < (j_m - 1), \\ 1 \leq (i_1 + 1) < \cdots < (i_{m-k} + 1), \\ (j_1 - 1) + \cdots + (j_m - 1) + (i_1 + 1) + \cdots + (i_{m-k} + 1) = n - k. \end{gathered}$$

Thus π' belongs to $\mathcal{B}(-k, n-k)$. The mapping from π' to π is defined in an analogous manner. Consequently, $\pi \mapsto \pi'$ is a bijection of $\mathcal{B}(k,n)$ onto $\mathcal{B}(-k, n-k)$ and then $b(k,n) = b(-k, n-k)$ for $k \leq -1$. On the other hand, $\mathcal{P}(n - k(k+1)/2) = \mathcal{P}((n-k) - (-k)(-k+1)/2)$.

It then suffices to construct the bijection ϕ for $k \geq 0$. Each sequence $\pi = (i_1, \ldots, i_l), (j_1, \ldots, j_m)$ in the set $\mathcal{B}(k,n)$ can be represented by a top-rectified diagramme containing n *crosses* and *plus signs* displayed on the lattice $\mathbb{Z}^2$ in the following manner. On the horizontal axis starting at and to the right of $(1,-1)$ place j_m crosses, on the axis just under it starting at $(2,-2)$ place j_{m-1} crosses, ... , on the axis of ordinate $-m$ place j_1 crosses starting at $(m,-m)$.

Next on the vertical axis starting from the point $(1,-2)$ and going down place i_l plus signs, on the axis of abscissa 2, starting from $(2,-3)$, place i_{l-1} plus signs, ... , on the vertical axis of abscissa l, starting from $(l, -(l+1))$, place i_1 plus signs.

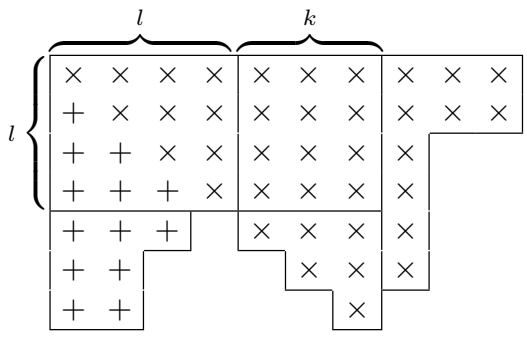

Fig. 1

For example, for $n = 51$, $k = 3$, $l = 4$, $m = l + k = 7$, the sequence $\pi = (i_1 = 0, i_2 = 2, i_3 = 5, i_4 = 6)$, $(j_1 = 1, j_2 = 3, j_3 = 4, j_4 = 5, j_5 = 6, j_6 = 9, j_7 = 10)$ has the representation shown in Fig. 1. The diagramme consists of five parts: (1) a *square* A of side $l = 4$ having crosses on and above its diagonal, and plus signs below its diagonal; (2) a *rectangle* B of width $k = 3$ and of height $l = 4$; (3) a diagramme C containing crosses which is necessary a *Ferrers diagramme* because the sequence $(i_m, \ldots, i_1)$

is strictly decreasing; (4) under A another *Ferrers diagramme* D containing plus signs; (5) under B a *staircase* E containing $k(k+1)/2$ crosses.

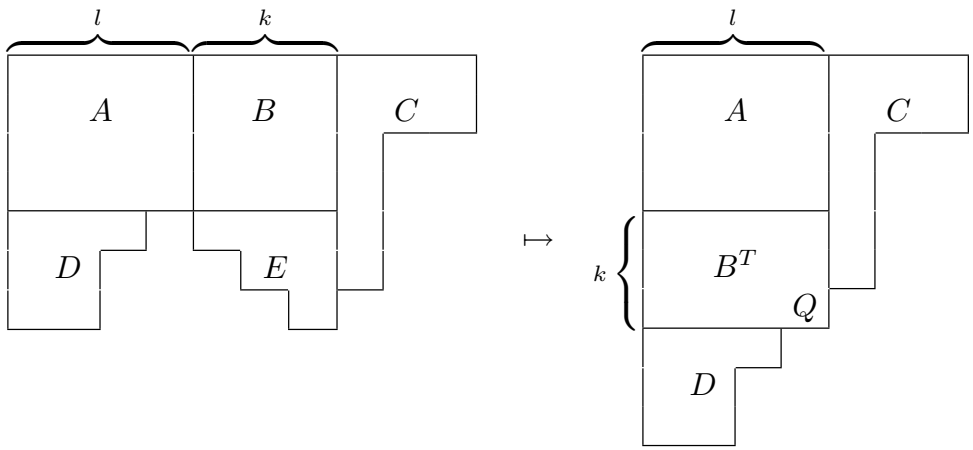

Fig. 2

The bijection ϕ is completely described in Fig. 2: remove the staircase E; then move out the rectangle B and insert it between the square A and the Ferrers diagramme D in such a way that its side of length l coincide with the side of length l of the square A; finally, push the diagramme E to the left so that its left rim coincide with the figure constructed with A, the transpose B^T of the rectangle B, and D. The conditions $k \geq 1$, $m = l + k$ imply that the configuration thereby derived—call it F—is a *Ferrers diagramme* containing $n - k(k+1)/2$ crosses or plus signs.

Note that when $l = 0$, the square A, the rectangle B and the diagramme D are empty. The initial configuration is reduced to the staircase E and the Ferrers diagramme C, itself reduced to its part contiguous to E. Then the configuration F is simply the Ferrers diagramme C. In particular, F has most k rows.

When $k = 0$, the rectangle B and the staircase E are empty and E is reduced to its part contiguous to A. The configuration reduced to A, to D and to the part of E contiguous to A is a Ferrers diagramme which remains alike under the transform ϕ.

When $k \geq 1$ and $l \geq 1$, the Ferrers diagramme F has at least $(k+1)$ rows, since k rows have been added to the square A which itself has $l \geq 1$ rows.

Conversely, how can we get back the original representation of π from the diagramme F, i.e., from any Ferrers diagramme with $n - k(k+1)/2$ points?

First, if $k = 0$, we know that $\pi \mapsto F$ is the identity mapping. If $k \geq 1$ and if the diagramme F has *at most* k rows, the representation of π is

obtained by putting the diagramme F to the right of a staircase E with $k(k+1)/2$ crosses.

It remains to study the case where $k \geq 1$ and F has at least $(k+1)$ rows. When building the diagramme F (see Fig. 2) the rightmost bottom point of the rectangle B^T, in position $(l, -l-k)$, always belongs to the rim of the diagramme F. Its right neighbor belongs to F if C has $(l+k)$ rows; in the same manner, the point just above it belongs to F if the greatest part of D is equal to l. But, in every case, the diagramme F has *no* point in position $(l+1, -l-k-1)$. The point $(l, -l-k)$ can then be characterized as being the unique point Q in F located on the line of equation $y = -x-k$ *and* on the rim of F.

To reconstruct π from F we just have to find the location of the point Q. Its position $(l, -l-k)$ uniquely determines l. We can then redraw the rectangle B^T, the square A and reverse the construction. $\square$

From Proposition 1 it follows that

$$\begin{aligned} a &= \sum_{n\geq 0} a(n)\, q^n \\ &= \sum_{\substack{k\in\mathbb{Z} \\ n\geq k(k+1)/2}} (-1)^k\, x^k\, p(n-k(k+1)/2)\, q^n \\ &= \sum_{n\geq 0,\, k\in\mathbb{Z}} (-1)^k\, x^k\, p(n)\, q^{n+k(k+1)/2} \\ &= \sum_{n\geq 0} p(n)\, q^n \sum_{k\in\mathbb{Z}} (-1)^k x^k\, q^{k(k+1)/2}, \end{aligned}$$

which is precisely the Jacobi triple product identity (1.1).

4. Crosses and bullets

To prove identity (1.2) we consider the formal power series:

$$d = \prod_{n=1}^{\infty} (1 - x^{-1}q^{2n-1})(1 - xq^{2n-1}) = \sum_{n\geq 0} q^n\, d(n)$$

and try to express it as the product of the two series forming the right-hand side of (1.2). For each $k \in \mathbb{Z}$ and $n \geq 0$ let $\mathcal{B}'(k,n)$ denote the set of all ordered pairs of *strictly increasing* sequences of *odd* integers $(i_1, \ldots, i_l), (j_1, \ldots, j_m)$ such that $l - m = k$ and $i_1 + \cdots + i_l + j_1 + \cdots + j_m = n$. Let $b'(k,n)$ be the cardinality of $\mathcal{B}'(k,n)$. Then

$$d(n) = \sum_k (-1)^k\, x^{2k}\, b'(k,n).$$

The combinatorial result to be proved is the following proposition which is parallel to Proposition 1. It was already stated by Lewis [Le84], but proved differently, as that author makes use of a different bijection.

Proposition 2. *For each pair* $(k,n) \in \mathbb{Z} \times \mathbb{N}$ *there is a bijection* $\phi' : \mathcal{B}'(k,n) \to \mathcal{P}((n-k^2)/2)$. *In particular,* $b'(k,n) = p((n-k^2)/2)$.

As we shall see, the bijection ϕ' will make use of the same geometric moves that entered the definition of ϕ. Only the displaying of *crosses* and now *bullets* will be different. In the following construction whenever a cross is deposited onto a point of the lattice $\mathbb{Z}^2$ on which a previous cross has been deposited, the superimposition of the two crosses will be indicated by a bullet. For convenience let us write: $\times \;\&\; \times = \bullet$.

Let $\pi = (i_1, \ldots, i_l), (j_1, \ldots, j_m)$ be an element of $\mathcal{B}'(k,n)$. It can be represented by a top-rectified diagramme in $\mathbb{Z}^2$ in the following manner. On $(1,-1)$ place a single cross and to its right place $(i_l - 1)/2$ bullets, then on $(2,-2)$ place a single cross and to its right $(i_{l-1} - 1)/2$ bullets, ... , on the row of ordinate $-m$ place a single cross on $(m,-m)$ and $(i_1 - 1)/2$ bullets to its right.

In the same way, place crosses and bullets on the vertical axis starting with $(-1,1)$. If a cross is deposited on a point already occupied by another cross, change the superimposition of those two crosses by a bullet. Place a cross on $(-1,1)$ and $(j_m - 1)/2$ bullets under that point, then a cross on $(-2,2)$ and $(j_{m-1} - 1)/2$ bullets under it, ... , a cross on $(-m,m,)$ and $(j_1 - 1)/2$ bullets under it.

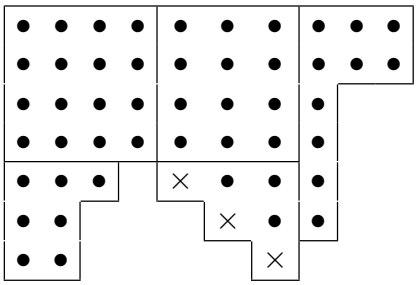

Fig. 3

With the above convention the configuration will exactly have
$(i_l - 1)/2 + \cdots + (i_1 - 1)/2 + (j_m - 1)/2 + \cdots + (j_1 - 1)/2 + \min(l,m)$
$= n/2 - (l+m)/2 + \min(l,m) = n/2 - k/2$ bullets and $|k| = |l - m|$ crosses.

For example, for $l = 7$, $m = 4$, $k = l - m = 3$, the sequence $\pi = (i_1 = 1, i_2 = 5, i_3 = 7, i_4 = 9, i_5 = 11, i_6 = 17, i_7 = 19), (j_1 = 1, j_2 = 5, j_3 = 11, j_4 = 13)$ has the representation shown in Fig. 3. The configuration contains $(9+8+5+4+3+2)+(6+5+2)+4 = 48$ bullets and three crosses.

If $k \geq 0$, the configuration has the same shape as the configuration described in Fig. 1. If $k \leq -1$ the configurations in $\mathcal{B}'(k,n)$ can be deduced from the configurations in $\mathcal{B}'(-k,n)$ by making a rotation about the axis

$x+y=0$. Assume $k \geq 0$. Each configuration may be partitioned into five components A, B, C, D, E whose *dimensions* have the same constraints as in the case of Fig. 1. Only their *contents* are different. The staircase E exactly has k crosses along its diagonal and $1+2+\cdots+(k-1)=(k-1)k/2$ bullets. As each bullet stands for two crosses, the staircase E contains the equivalent of $k+2\times(k-1)k/2=k^2$ crosses. In particular $n \geq k^2$.

We can apply the bijection $\pi \mapsto F$ described in Fig. 2. If π is in $\mathcal{B}'(k,n)$ $(k \geq 0)$, then F is a Ferrers diagramme containing $n/2-(l+m)/2+\min(l,m)-(k-1)k/2=n/2-k^2/2$ bullets. Thus $\pi \mapsto F$ is a bijection of $\mathcal{B}'(k,n)$ onto $\mathcal{P}(n/2-k^2/2)$. $\square$

It follows from Proposition 2 that

$$\begin{aligned} d=\sum_{n\geq 0} d(n)\, q^n &= \sum_{k\in\mathbb{Z},\, n\geq k^2} (-1)^k\, x^{2k}\, p((n-k^2)/2)\, q^n \\ &= \sum_{n\geq 0,\, k\in\mathbb{Z}} (-1)^k\, x^{2k}\, p(2n)\, q^{2n+k^2} \\ &= \sum_{n\geq 0} p(2n)\, q^{2n} \sum_{k\in\mathbb{Z}} (-1)^k\, x^{2k}\, q^{k^2}, \end{aligned}$$

which is precisely identity (1.2).

The bijection $\pi \mapsto F$ may also serve to proving the finite versions (1.4) and (1.5). We illustrate the method for the latter identity. Let $\mathcal{P}_{L,M}(n)$ be the set of partitions of n whose greatest part is at most equal to L and number of parts at most equal to M. Also let $p_{L,M}(n)$ denote the cardinality of $\mathcal{P}_{L,M}(n)$. We make use of the classical identity (easy to derive)

$$\sum_{n\geq 0} q^n\, p_{L,M}(n) = \begin{bmatrix} L+M \\ L \end{bmatrix}_q .$$

On the other hand, let $\mathcal{B}'_{L,M}(k,n)$ be the subset of pairs of sequences $(i_1,\ldots,i_l)$, $(j_1,\ldots,j_m)$ in $\mathcal{B}'(k,n)$ with the further condition that $l \leq L$ and $m \leq M$ and let $b'_{L,M}(k,n)$ be the cardinality of $\mathcal{B}'_{L,M}(k,n)$. Then

$$d_{L,M}(n) = \sum_k (-1)^k x^{2k}\, b'_{L,M}(k,n).$$

Now it is readily seen that the above bijection $\pi \mapsto F$ maps $\mathcal{B}'_{L,M}(k,n)$ onto $\mathcal{P}_{L-k,M+k}((n-k^2)/2)$. As $(x^2;q^2)_L\,(x^{-2};q^2)_M = \sum_{n\geq 0} q^n\, d_{L,M}(n)$, we obtain

$$(x^2;q^2)_L\,(x^{-2};q^2)_M = \sum_{n\geq 0} q^n \sum_k (-1)^k x^{2k}\, b'_{L,M}(k,n)$$

$$
\begin{aligned}
&= \sum_{n\geq 0} q^n \sum_k (-1)^k x^{2k}\, p_{L-k,M+k}((n-k^2)/2) \\
&= \sum_k (-1)^k x^{2k} \sum_{n\geq 0} q^n\, p_{L-k,M+k}((n-k^2)/2) \\
&= \sum_k (-1)^k x^{2k} q^{k^2} \sum_{n\geq 0} q^n\, p_{L-k,M+k}(2n) q^{2n} \\
&= \sum_k (-1)^k x^{2k} q^{k^2} \begin{bmatrix} L+M \\ L-k \end{bmatrix}_{q^2},
\end{aligned}
$$

which is identity (1.5) with the substitutions $n \leftarrow M$ and $m \leftarrow L$.

5. The quintuple product identity

To derive the quintuple product identity (1.3) it suffices to prove

$$
\begin{aligned}
\prod_{i=1}^{\infty} \frac{1}{1-q^i} \sum_{k\in\mathbb{Z}} (-1)^k x^k q^{k(k+1)/2} \times \prod_{i=1}^{\infty} \frac{1}{1-q^{2i}} \sum_{k\in\mathbb{Z}} (-1)^k x^{2k} q^{k^2} \\
= \prod_{i=1}^{\infty} \frac{1}{1-q^i} \sum_{k\in\mathbb{Z}} q^{(3k^2+k)/2} (x^{3k} - x^{3k-1}),
\end{aligned}
$$

or by using the Euler pentagonal number identity

$$
\prod_{i\geq 1} (1-q^i) = \sum_{k\in\mathbb{Z}} (-1)^k\, q^{(3k^2-k)/2},
$$

to prove the identity

$$
\begin{aligned}
\sum_{k\in\mathbb{Z}} (-1)^k x^k q^{k(k+1)/2} \times \sum_{l\in\mathbb{Z}} (-1)^l x^{2l} q^{l^2} \\
= \sum_{n\in\mathbb{Z}} (-1)^n\, q^{3n^2-n} \times \sum_{m\in\mathbb{Z}} q^{(3m^2+m)/2} (x^{3m} - x^{-3m-1}).
\end{aligned}
$$

Write the product of the two series of the left-hand side as the sum of three series denoted by S_0, S_1, S_2:

$$
\begin{aligned}
\sum_{k,l} (-1)^{k+l}\, x^{k+2l} q^{k(k+1)/2+l^2} &= \sum_m x^{3m} \sum_{k+2l=3m} (-1)^{k+l}\, q^{k(k+1)/2+l^2} \\
&\quad + \sum_m x^{3m-1} \sum_{k+2l=3m-1} (-1)^{k+l}\, q^{k(k+1)/2+l^2} \\
&\quad + \sum_m x^{3m-2} \sum_{k+2l=3m+2} (-1)^{k+l}\, q^{k(k+1)/2+l^2} \\
&= S_0 + S_1 + S_2.
\end{aligned}
$$

For S_0 notice that $k+2l=3m$ and $l-m=n$ imply: $k+l=2m-n$ and $k(k+1)/2+l^2=(3m^2+m)/2+3n^2-n$. Hence

$$S_0=\sum_m q^{(3m^2+m)/2}\,x^{3m}\sum_n(-1)^n\,q^{3n^2-n}.$$

For S_1 the change of indices $k+2l=3m-1$ et $l-m=n$ imply: $k+l=2m-n-1$ and $k(k+1)/2+l^2=(3m^2-m)/2+3n^2+n$. Hence

$$\begin{aligned}S_1&=-\sum_m q^{(3m^2-m)/2}\,x^{3m-1}\sum_n(-1)^n\,q^{3n^2+n}\\&=-\sum_m q^{(3m^2+m)/2}\,x^{-3m-1}\sum_n(-1)^n\,q^{3n^2-n}.\end{aligned}$$

Finally, for S_2 make the change of indices $k+2l=3m-2$ and $l-m=n$, so that $k+l=2m-n-2$ et $k(k+1)/2+l^2=(3m^2-3m+2)/2+3n^2+3n$. Hence

$$S_2=\sum_m x^{3m-2}\,q^{(3m^2-3m+2)/2}\sum_n(-1)^n\,q^{3n^2+3n}.$$

But $\sum_{n\in\mathbb{Z}}(-1)^n\,(q^3)^{n(n+1)}=0$, and $S_2=0$. The sum S_0+S_1 is exactly the right-hand side of the quintuple product identity (1.3). $\square$

References

[Ad85] B. Adiga, B. C. Berndt, S. Bhargava and G .N. Watson, *Ramanujan's second notebook: Theta-functions and q-series* Chap. 16. Amer. Math. Soc., Prodidence 1985 (*Amer. Math. Soc. Memoirs*, vol. **315**).

[An65] G. E. Andrews, A simple proof of Jacobi's triple product identity, *Proc. Amer. Math. Soc.*, vol. **16**, 1965, p. 333-334.

[An74] G. E. Andrews, Applications of basic hypergeometric functions, *SIAM Rev.*, vol. **16**, 1974, p. 441–484.

[An76] G. E. Andrews, *The Theory of Partitions*. Addison-Wesley, Reading, 1976 (*Encyclopedia of Math. and Its Appl.,* vol. **2**).

[An84] G. E. Andrews, *Generalized Frobenius partitions*. Amer. Math. Soc., Providence, 1984 (*Amer. Math. Soc. Memoirs*, vol. **49**), pp. 4-5.

[An98] G. E. Andrews, Private communication, 1998.

[At54] A. O. L. Atkin and P. Swinnerton-Dyer, Some properties of partitions, *Proc. London. Math. Soc.*, vol. **4**, 1954, p. 84–106.

[Ba51] W. N. Bailey, On the simplification of some identities of the Rogers-Ramanujan type, *Proc. London Math. Soc.*, vol. **1**, 1951, p. 217–221.

[Br97] D. Bressoud, Proofs and Confirmations. The story of the alternating sign matrix conjecture. Preprint, Macalester College, Saint Paul, 1997.

[Ca72] L. Carlitz and M. V. Subbarao, A simple proof of the quintuple product identity, *Proc. Amer. Math. Soc.*, vol. **32**, 1972, p. 42–44.

[Che64] M. S. Cheema, Vector partitions and combinatorial identities, *Math. Comp.*, vol. **18**, 1964, p. 414–420.

[Ew81] J. A. Ewell, An easy proof of the triple-product identity, *Amer. Math. Monthly*, vol. **88**, 1981, p. 270–272.

[Ga86] F. G. Garvan, Generalizations of Dyson's Rank. Ph. D Thesis, Pennsylvania State University, May 1986, 128 p.

[Ga90] G. Gasper and M. Rahman, *Basic Hypergeometric Series*. Cambridge Univ. Press, Cambridge and New York, 1990 (Encyclopedia of Math. and its Appl., vol. **35**), p. 134.

[Go61] B. Gordon, Some identities in combinatorial analysis, *Quart. J. Math. (Oxford)*, vol. **12**, 1961, p. 285–290.

[Gu80] H. Gupta, *Selected Topics in Number Theory*. Abacus Press, Tunbridge Wells, 1980, pp. 213-215.

[Gu87] R. A. Gustafson, Multilateral summation theorems for ordinary and basic hypergeometric series in $U(n)$, *SIAM J. Math. Anal.*, vol. **18**, 1987, p. 1576–1596.

[Ha38] G. H. Hardy and E. M. Wright, *An Introduction to the Theory of Numbers*. Clarendon Press, Oxford, 1938. Reprinted with corrections, 1985.

[Hi88] M. D. Hirschhorn, A generalization of the quintuple product identity, *J. Austral. Math. Soc.*, vol. **A 44**, 1988, p. 42–45.

[Jo89] T. T. Joichi and D. Stanton, An involution for Jacobi's identity, *Discrete Math.*, vol. **73**, 1989, p. 261–272.

[Ka78] V. G. Kac, Infinite-dimensional algebras, Dedekind's η-function, classical Möbius function and the very strange formula, *Advances in Math.*, vol. **30**, 1978, p. 85–136.

[Ka85] V. G. Kac, *Infinite Dimensional Lie Algebras* 2nd. Edition. Cambridge Univ. Press, Cambridge 1985.

[Kr99] Ch. Krattenthaler, Private communication, 1999.
[Le78] J. Lepowsky and S. Milne, Lie algebraic approaches to classical partition identities, *Advances in Math.*, vol. **29**, 1978, p. 15–59.
[Le84] R. P. Lewis, A combinatorial proof of the triple product identity, *Amer. Math. Monthly*, vol. **91**, 1984, p. 420–423.
[Ma15] (Major) P. A. MacMahon, *Combinatory Analysis* vol. I, II. Cambridge Univ. Press, 1915. Reprinted by Chelsea, New York, 1960.
[Ma82] I. G. Macdonald, Some conjectures for root systems, *SIAM J. Math. Anal.*, vol. **13**, 1982, p. 988–1007.
[Me65] P. K. Menon, On Ramanujan's continued fraction and related identities, *J. London Math. Soc.*, vol. **40**, 1965, p. 49–54.
[Mi85] S. Milne, An elementary proof of the Macdonald identities for $A_l^{(1)}$, *Adv. in Math.*, vol. **57**, 1985, p. 34–70.
[Se52] D. B. Sears, Two identities of Bailey, *J. London Math. Soc.*, vol. **27**, 1952, p. 510–511.
[Su70] M. V. Subbarao and M. Vidyasagar, On Watson's quintuple product identity, *Proc. Amer. Math. Soc.*, vol. **26**, 1970, p. 23–27.
[Su66] C. Sudler, Two enumerative proofs of an identity of Jacobi, *Proc. Edinburgh Math. Soc.*, vol. **15**, 1966, p. 67–71.
[Sy82] J. J. Sylvester, A constructive theory of partitions in three acts, an interact and an exodion, *Amer. J. Math.*, vol. **5**, 1882, p. 251–330 (or pp. 1-83 of the Coll. Math. Papers of J.J. Sylvester, vol. 4, Cambridge Univ. Press, London and New York, 1912; reprinted by Chelsea, New York, 1974).
[Wa29] G. N. Watson, Theorems stated by Ramanujan. VII: Theorems on continued fractions, *J. London Math. Soc.*, vol. **4**, 1929, p. 39–48.
[Wr65] E. M. Wright, An enumerative proof of an identity of Jacobi, *J. London Math. Soc.*, vol. **40**, 1965, p. 55–57.
[Ze98] J. Zeng, Private communication, 1998.
[Zo79] J. Zolnowsky, A direct combinatorial proof of the Jacobi identity, *Discrete Math.*, vol. **9**, 1974, p. 293–298.

Dominique Foata
Département de mathématique
Université Louis Pasteur
7, rue René-Descartes
F-67084 Strasbourg
foata@math.u-strasbg.fr

Guo-Niu Han
I.R.M.A. et C.N.R.S.
Université Louis Pasteur
7, rue René-Descartes
F-67084 Strasbourg
guoniu@math.u-strasbg.fr